ISOKERN

DM SYSTEM and LINER SYSTEM

SCHIEDEL

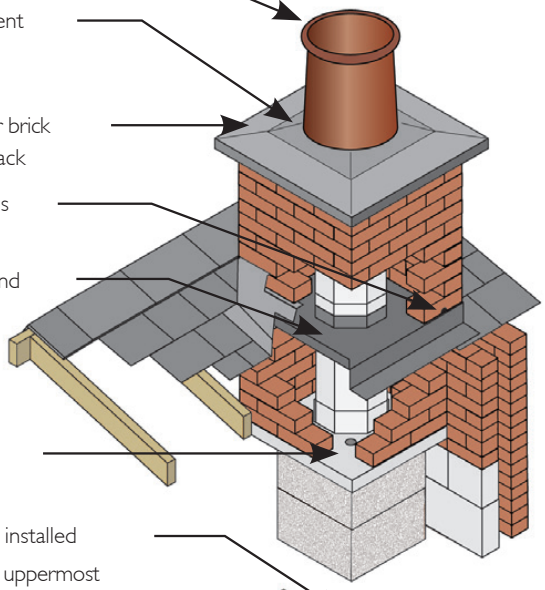

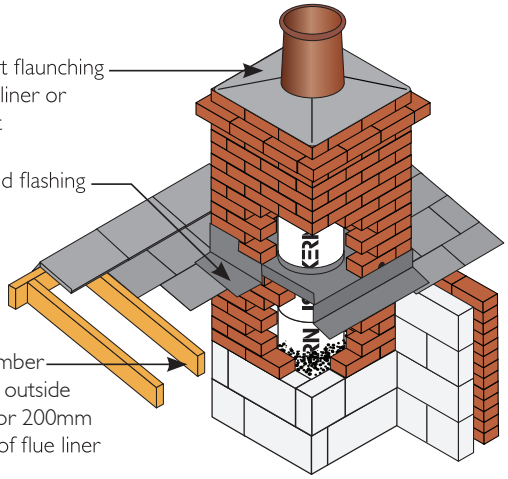

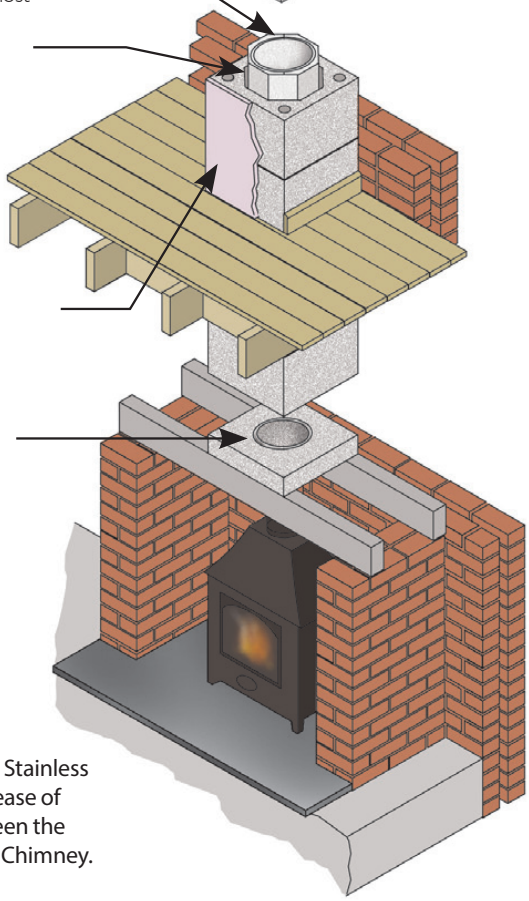

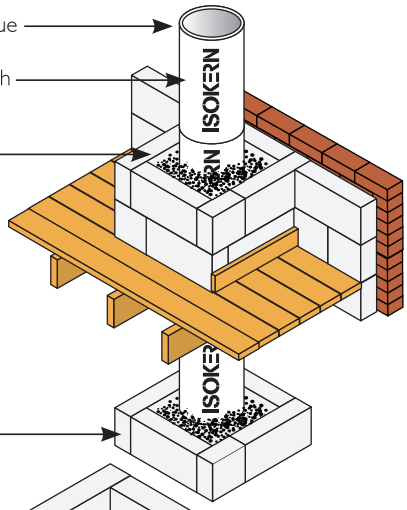

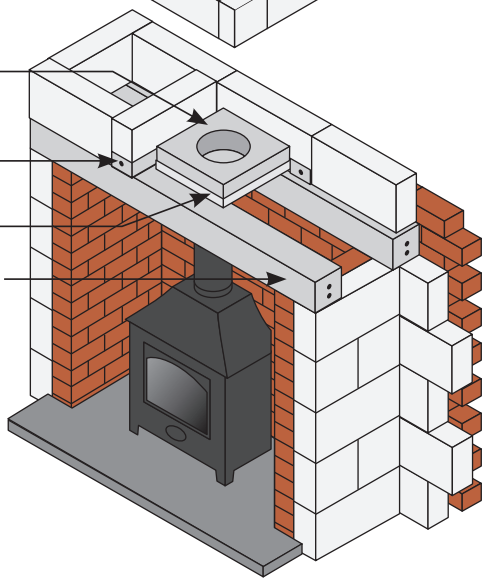

System includes a Stainless Steel adaptor for ease of connection between the stove and the DM Chimney.

Visit www.schiedel.com/uk for more information

A standard INDUSTRIES COMPANY